Thermistor Quartz Crystal

3.2 T2016

Thermistor Quartz Crystals
T2016 Series

FEATURES

- Low aging
- Excellent shock and vibration performance
- Thermally coupled temperature sensor

TYPICAL APPLICATION

- The best choice of Automotive, Communtications GPS, Wifi and Mobile phones

DIMENSIONS

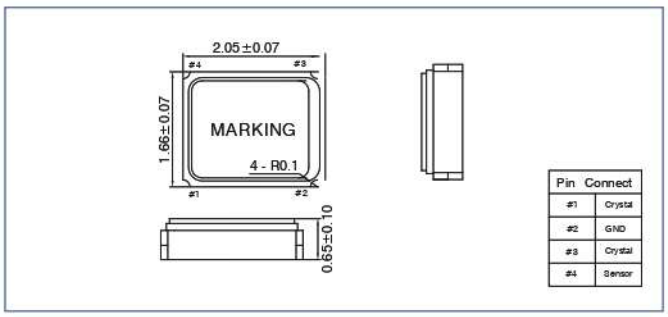

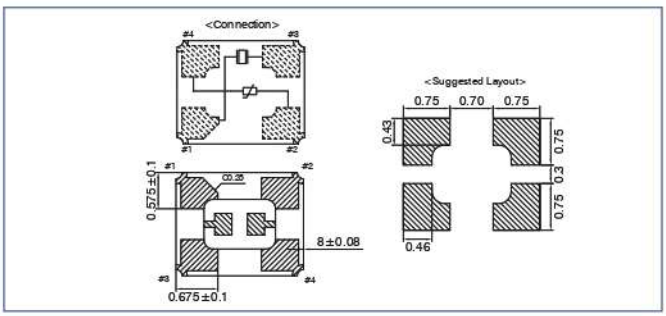

ELECTRICAL SPECIFICATION

Item/Type	T2016
Frequency Range	19.2MHz, 26MHz, 38.4MHz
Frequency Tolerance (at 25°C)	±10ppm, or specify
Frequency Stability Over Operating Temperature Range	±12ppm, or specify
Operating Temperature Range	-30 ~ +85°C, or specify
Shunt Capacitance (C_0)	3pF Max.
Load Capacitance	7pF, or specify
Drive Level	100μW (typical)
Aging(at 25°C)	±1 ppm/year Max.
Storage Temperature Range	-40 ~ +85°C

EQUIVALENT SERIES RESISTANCE(ESR)

Frequency	Resistance
19.2MHz ≤ f_nom < 30.0MHz	80Ω Max.
30.0MHz ≤ f_nom < 54.0MHz	60Ω Max.

FREQ. STABILITY vs. TEMP. RANGE

Temp.(°C) \ ppm	±12
-30 ~ +85	○

*o: Available Δ: Condition X: Not available

Note: not all combination of options are available. Other specifications may be available upon request.